STAMFORD
Your Innovative Precision Tooling Specialist

T-SLOT CUTTER

MANUFACTURED FOR HIGH QUALITY MILLING AND GROOVING

- *Quality material and construction - solid carbide T-slot milling head with cylindrical steel or carbide shank*
- *Competitively priced, short lead time & prompt delivery*
- *Available for deep slim slotting and grooving*
- *Customizable designs and dimensions*

MINI SOLID CARBIDE T-SLOT CUTTER

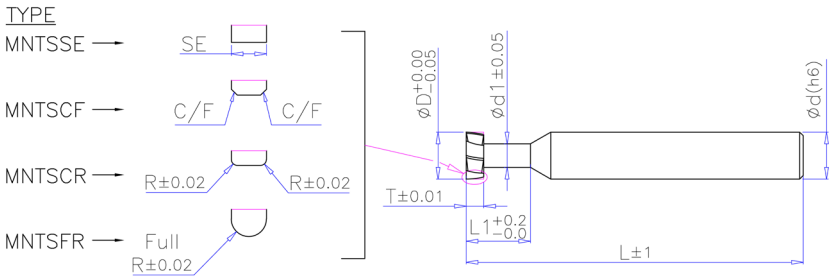

SPIRAL FLUTE: 15°

D	T	L1	d1	L	d	Z
1.5	0.1	3	0.8	38	3	3
	0.2	3	0.8	38	3	3
	0.3	3	0.8	38	3	3
	0.4	3	0.8	38	3	3
2	0.1	4	1	38	3	3
	0.2	4	1	38	3	3
	0.3	4	1	38	3	3
	0.4	4	1	38	3	3
	0.5	5	1	38	3	3
	0.6	5	1	38	3	3
3	0.2	5	1.5	50	3	3
	0.4	5	1.5	50	3	3
	0.6	5	1.5	50	3	3
	0.8	5	1.5	50	3	3
	1	5	1.5	50	3	3
4	0.2	6	2	50	4	3
	0.4	6	2	50	4	3
	0.6	6	2	50	4	3
	0.8	6	2	50	4	3
	1	6	2	50	4	3
	1.2	6	2	50	4	3

D	T	L1	d1	L	d	Z
5	0.2	6	2.5	50	5	4
	0.4	6	2.5	50	5	4
	0.6	6	2.5	50	5	4
	0.8	6	2.5	50	5	4
	1	6	2.5	50	5	3
	1.2	6	2.5	50	5	3
	1.5	6	2.5	50	5	3
6	0.2	6	3	59	6	4
	0.4	6	3	59	6	4
	0.6	6	3	59	6	4
	0.8	6	3	59	6	4
	1	6	3	59	6	4
	1.2	6	3	59	6	3
	2	6	3	59	6	3

D	T	L1	d1	L	d	Z
8	0.4	6	4	59	8	6
	0.6	6	4	59	8	6
	0.8	6	4	59	8	6
	1	6	4	59	8	4
	1.2	6	4	59	8	4
	1.5	6	4	59	8	4
	2	6	4	59	8	4
	2.5	8	4	59	8	4
10	0.4	8	5	74	10	6
	0.6	8	5	74	10	6
	0.8	8	5	74	10	6
	1	8	5	74	10	4
	1.2	8	5	74	10	4
	2	8	5	74	10	4
	3	10	5	74	10	4

NOTE:
1. Chamfer, Radius & Full Radius are customized designs.
2. Submicron grade carbide.
3. Other dimensions will be provided upon request.
4. All specifications are subject to change without prior notice.
5. Keyseat cutter with hollow clearance (no side cutting edge) is also available.

For customization, please fill in your required dimensions here:

Type	D	T	L1	d1	L	d	Z	C/F	R	Full R
	Tol:									
	Size:									

LONG REACH CARBIDE T-SLOT CUTTER

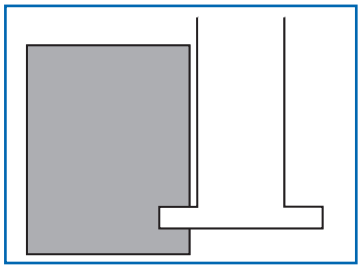

Long reach slot cutting

SPIRAL FLUTE: 15°

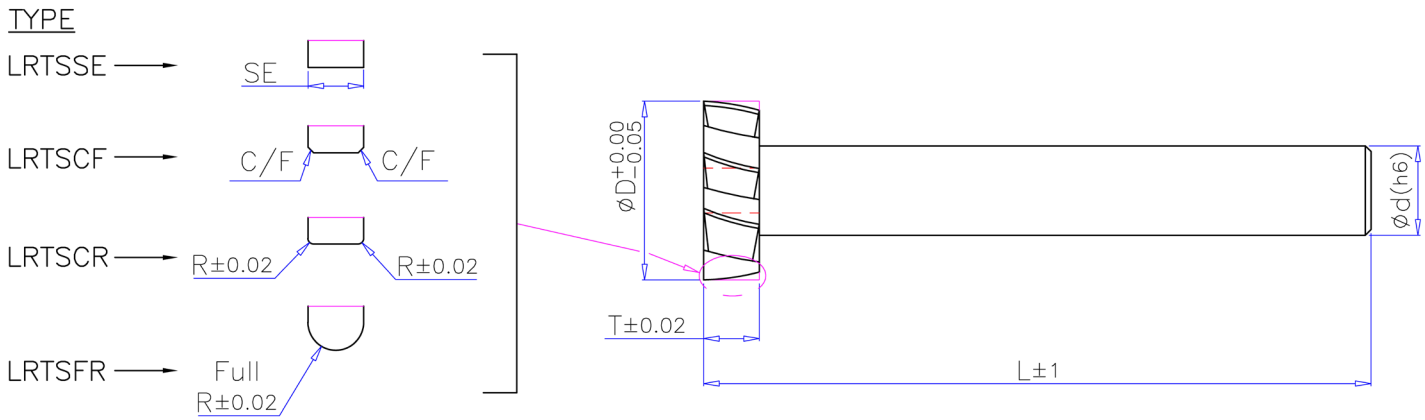

D	T	L	d	Z
12	0.5	59	8	6
	1	59	8	6
	2	59	8	6
	3	59	8	6
	4	59	8	6
	5	59	8	6
14	0.5	59	8	6
	1	59	8	6
	2	59	8	6
	3	59	8	6
	4	59	8	6
	5	59	8	6

D	T	L	d	Z
15	1	59	8	6
	2	59	8	6
	3	59	8	6
	4	59	8	6
	5	59	8	6
16	1	59	8	6
	2	59	8	6
	3	59	8	6
	4	59	8	6
	5	59	8	6
18	1	73	10	6
	2	73	10	6
	3	73	10	6
	4	73	10	6
	5	73	10	6
	6	73	10	6

D	T	L	d	Z
20	1	73	10	6
	2	73	10	6
	3	73	10	6
	4	73	10	6
	5	73	10	6
	6	73	10	6
22	1	74	12	8
	2	74	12	8
	3	74	12	8
	4	74	12	8
	5	74	12	8
	6	74	12	8
25	1	74	12	8
	2	74	12	8
	3	74	12	8
	4	74	12	8
	5	74	12	8
	6	74	12	8

D	T	L	d	Z
28	1	100	16	8
	2	100	16	8
	3	100	16	8
	4	100	16	8
	5	100	16	8
	6	100	16	8
	7	100	16	8
	8	100	16	8
30	1	100	16	10
	2	100	16	10
	3	100	16	10
	4	100	16	10
	5	100	16	10
	6	100	16	10
	7	100	16	10
	8	100	16	10
32	1	100	16	10
	2	100	16	10
	3	100	16	10
	4	100	16	10
	5	100	16	10
	6	100	16	10
	7	100	16	10
	8	100	16	10

NOTE:
1. Chamfer, Radius & Full Radius are customized designs.
2. Submicron grade carbide.
3. Other dimensions will be provided upon request.
4. All specifications are subject to change without prior notice.
5. Keyseat cutter with hollow clearance (no side cutting edge) is also available.

For customization, please fill in your required dimensions here:

Type	D	T	L	d	Z	C/F	R	Full R
	Tol:							
	Size:							

DEEP CUT CARBIDE T-SLOT CUTTER - STEEL SHANK

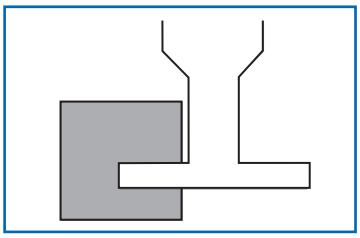

Deep slim slot cutting

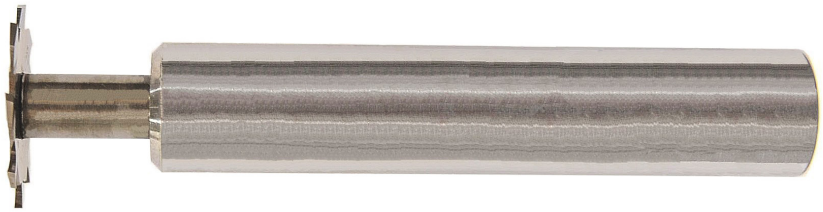

SPIRAL FLUTE: 15°

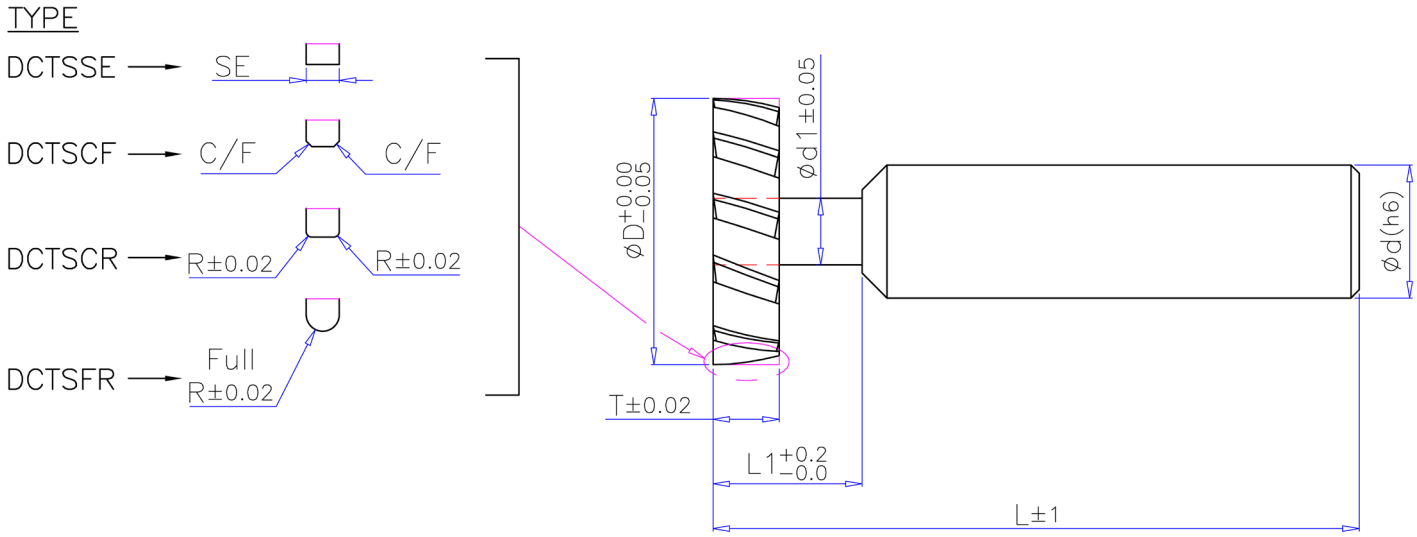

D	T	L1	d1	L	d	Z
18	1	18	8	98	16	8
	2	18	8	98	16	8
	3	18	8	98	16	8
	4	18	8	98	16	8
	5	18	8	98	16	8
	6	18	8	98	16	8
20	1	18	8	98	16	8
	2	18	8	98	16	8
	3	18	8	98	16	8
	4	18	8	98	16	8
	5	18	8	98	16	8
	6	18	8	98	16	8
22	1	18	8	98	16	8
	2	18	8	98	16	8
	3	18	8	98	16	8
	4	18	8	98	16	8
	5	18	8	98	16	8
	6	18	8	98	16	8

D	T	L1	d1	L	d	Z
25	1	18	8	98	16	8
	2	18	8	98	16	8
	3	18	8	98	16	8
	4	18	8	98	16	8
	5	18	8	98	16	8
	6	18	8	98	16	8
	8	18	8	98	16	8
28	1	18	8	98	16	8
	2	18	8	98	16	8
	3	18	8	98	16	8
	4	18	8	98	16	8
	5	18	8	98	16	8
	6	18	8	98	16	8
	8	18	8	98	16	8

D	T	L1	d1	L	d	Z
30	1	18	8	98	16	10
	2	18	8	98	16	10
	3	18	8	98	16	10
	4	18	8	98	16	10
	5	18	8	98	16	10
	6	18	8	98	16	10
	8	18	8	98	16	10
32	1	18	8	98	16	10
	2	18	8	98	16	10
	3	18	8	98	16	10
	4	18	8	98	16	10
	5	18	8	98	16	10
	6	18	8	98	16	10
	8	18	8	98	16	10

NOTE:
1. Chamfer, Radius & Full Radius are customized designs.
2. Submicron grade carbide.
3. Other dimensions will be provided upon request.
4. All specifications are subject to change without prior notice.
5. Keyseat cutter with hollow clearance (no side cutting edge) is also available.

For customization, please fill in your required dimensions here:

Type	D	T	L1	d1	L	d	Z	C/F	R	Full R
	Tol:									
	Size:									

Recommended Cutting Condition Table For T-slot Cutter

Material	Non-Ferrous (Aluminium,Copper...)		Carbon Steels & Alloy Steels (FC,FCD,S45C,S50C,SNCM,SKS...)		Tool Steels & Stainless Steel (SKD11,SKD61,SCM,SUS304...)		Hardened Steels (HPM,NAK80...)		Milling Depth
Cutting Speed	15 ~ 30m/min		12 ~ 20m/min		10 ~ 16m/min		8 ~ 14m/min		
Diameter	Spindle Speed (RPM)	Feed (mm/min)	Spindle Speed (RPM)	Feed (mm/min)	Spindle Speed (RPM)	Feed (mm/min)	Spindle Speed (RPM)	Feed (mm/min)	
1.5	3183 ~ 6365	86 ~ 286	2546 ~ 4244	46 ~ 153	2122 ~ 3395	38 ~ 122	1697 ~ 2971	24 ~ 53	0.15
2	2387 ~ 4774	65 ~ 214	1910 ~ 3183	34 ~ 115	1591 ~ 2546	29 ~ 92	1273 ~ 2228	18 ~ 40	0.20
3	1591 ~ 3183	46 ~ 155	1273 ~ 2122	25 ~ 82	1061 ~ 1697	21 ~ 66	849 ~ 1485	13 ~ 29	0.30
4	1194 ~ 2387	37 ~ 125	955 ~ 1591	20 ~ 67	796 ~ 1273	16 ~ 53	637 ~ 1114	10 ~ 23	0.40
5	955 ~ 1910	32 ~ 107	764 ~ 1273	17 ~ 57	637 ~ 1018	14 ~ 46	509 ~ 891	9 ~ 20	0.50
6	796 ~ 1591	28 ~ 95	637 ~ 1061	15 ~ 51	530 ~ 849	12 ~ 40	424 ~ 743	8 ~ 18	0.60
8	597 ~ 1194	32 ~ 107	477 ~ 796	17 ~ 57	398 ~ 637	14 ~ 46	318 ~ 557	9 ~ 20	0.80
10	477 ~ 955	29 ~ 95	382 ~ 637	15 ~ 51	318 ~ 509	13 ~ 41	255 ~ 446	8 ~ 18	1.00
12	398 ~ 796	39 ~ 131	318 ~ 530	19 ~ 63	265 ~ 424	16 ~ 51	212 ~ 371	10 ~ 22	1.20
14	341 ~ 682	41 ~ 123	273 ~ 455	18 ~ 60	227 ~ 364	15 ~ 48	182 ~ 318	9 ~ 21	1.40
15	318 ~ 637	48 ~ 143	255 ~ 424	29 ~ 80	212 ~ 339	24 ~ 64	170 ~ 297	17 ~ 33	1.50
16	298 ~ 597	45 ~ 134	239 ~ 398	27 ~ 75	199 ~ 318	23 ~ 60	159 ~ 278	16 ~ 31	1.60
18	265 ~ 530	40 ~ 119	212 ~ 354	25 ~ 70	177 ~ 283	21 ~ 56	141 ~ 248	15 ~ 30	1.80
20	239 ~ 477	43 ~ 129	191 ~ 318	25 ~ 71	159 ~ 255	22 ~ 57	127 ~ 223	15 ~ 30	2.00
22	217 ~ 434	56 ~ 167	174 ~ 289	33 ~ 93	145 ~ 231	28 ~ 74	116 ~ 203	19 ~ 37	2.20
25	191 ~ 382	54 ~ 161	153 ~ 255	32 ~ 89	127 ~ 204	26 ~ 71	102 ~ 178	18 ~ 38	2.50
28	171 ~ 341	52 ~ 153	136 ~ 227	31 ~ 85	114 ~ 182	25 ~ 68	91 ~ 159	18 ~ 36	2.80
30	159 ~ 318	64 ~ 191	127 ~ 212	38 ~ 106	106 ~ 170	32 ~ 85	85 ~ 149	22 ~ 45	3.00
32	149 ~ 298	63 ~ 185	119 ~ 199	38 ~ 103	99 ~ 159	32 ~ 83	80 ~ 139	22 ~ 45	3.20

**Feed(mm/min)÷Spindle speed(rpm)=Feed rate(mm/rev)*
**In case that cut width is 1mm and less, reduce feed by 20%.*
**In case that R is 0.3mm and less, reduce feed by 10%.*
**In case that R is 0.75mm and less, reduce feed by 5%.*

Recommended Cutting Condition Table For Keyseat Cutter

Material	Non-Ferrous (Aluminium,Copper...)		Carbon Steels & Alloy Steels (FC,FCD,S45C,S50C,SNCM,SKS...)		Tool Steels & Stainless Steel (SKD11,SKD61,SCM,SUS304...)		Hardened Steels (HPM,NAK80...)		Milling Depth
Cutting Speed	15 ~ 30m/min		12 ~ 20m/min		10 ~ 16m/min		8 ~ 14m/min		
Diameter	Spindle Speed (RPM)	Feed (mm/min)	Spindle Speed (RPM)	Feed (mm/min)	Spindle Speed (RPM)	Feed (mm/min)	Spindle Speed (RPM)	Feed (mm/min)	
1.5	3183 ~ 6365	65 ~ 214	2546 ~ 4244	34 ~ 115	2122 ~ 3395	28 ~ 92	1697 ~ 2971	18 ~ 40	0.15
2	2387 ~ 4774	48 ~ 161	1910 ~ 3183	26 ~ 86	1591 ~ 2546	22 ~ 69	1273 ~ 2228	14 ~ 30	0.20
3	1591 ~ 3183	35 ~ 116	1273 ~ 2122	19 ~ 62	1061 ~ 1697	16 ~ 49	849 ~ 1485	10 ~ 22	0.30
4	1194 ~ 2387	28 ~ 94	955 ~ 1591	15 ~ 50	796 ~ 1273	12 ~ 40	637 ~ 1114	8 ~ 17	0.40
5	955 ~ 1910	24 ~ 80	764 ~ 1273	13 ~ 43	637 ~ 1018	11 ~ 34	509 ~ 891	7 ~ 15	0.50
6	796 ~ 1591	21 ~ 72	637 ~ 1061	12 ~ 38	530 ~ 849	9 ~ 30	424 ~ 743	6 ~ 13	0.60
8	597 ~ 1194	24 ~ 80	477 ~ 796	13 ~ 43	398 ~ 637	10 ~ 34	318 ~ 557	7 ~ 15	0.80
10	477 ~ 955	22 ~ 71	382 ~ 637	11 ~ 38	318 ~ 509	10 ~ 31	255 ~ 446	6 ~ 13	1.00
12	398 ~ 796	29 ~ 98	318 ~ 530	14 ~ 47	265 ~ 424	12 ~ 38	212 ~ 371	7 ~ 17	1.20
14	341 ~ 682	31 ~ 92	273 ~ 455	14 ~ 45	227 ~ 364	12 ~ 36	182 ~ 318	7 ~ 16	1.40
15	318 ~ 637	36 ~ 107	255 ~ 424	22 ~ 60	212 ~ 339	18 ~ 48	170 ~ 297	13 ~ 25	1.50
16	298 ~ 597	34 ~ 100	239 ~ 398	20 ~ 56	199 ~ 318	17 ~ 45	159 ~ 278	12 ~ 23	1.60
18	265 ~ 530	30 ~ 89	212 ~ 354	19 ~ 53	177 ~ 283	16 ~ 42	141 ~ 248	11 ~ 22	1.80
20	239 ~ 477	32 ~ 97	191 ~ 318	19 ~ 53	159 ~ 255	16 ~ 43	127 ~ 223	11 ~ 22	2.00
22	217 ~ 434	42 ~ 125	174 ~ 289	25 ~ 69	145 ~ 231	21 ~ 56	116 ~ 203	15 ~ 28	2.20
25	191 ~ 382	40 ~ 121	153 ~ 255	24 ~ 66	127 ~ 204	20 ~ 53	102 ~ 178	14 ~ 28	2.50
28	171 ~ 341	39 ~ 115	136 ~ 227	23 ~ 64	114 ~ 182	19 ~ 51	91 ~ 159	14 ~ 27	2.80
30	159 ~ 318	48 ~ 143	127 ~ 212	29 ~ 80	106 ~ 170	24 ~ 64	85 ~ 149	16 ~ 34	3.00
32	149 ~ 298	47 ~ 139	119 ~ 199	29 ~ 78	99 ~ 159	24 ~ 62	80 ~ 139	17 ~ 33	3.20

**In case that R is 0.3mm and less, reduce feed by 10%.*
**In case that R is 0.75mm and less, reduce feed by 5%.*